Dial oil level gauge

The level gauge displaying oil level in transformer

This product is used to measure and indicate the level of oil in the transformer. This gauge indicates the oil level position by using a magnet. Electric contact device switched on upper or lower limit is provided.

◆ **Fig.** Type : OCS-M1 , OCS-M2

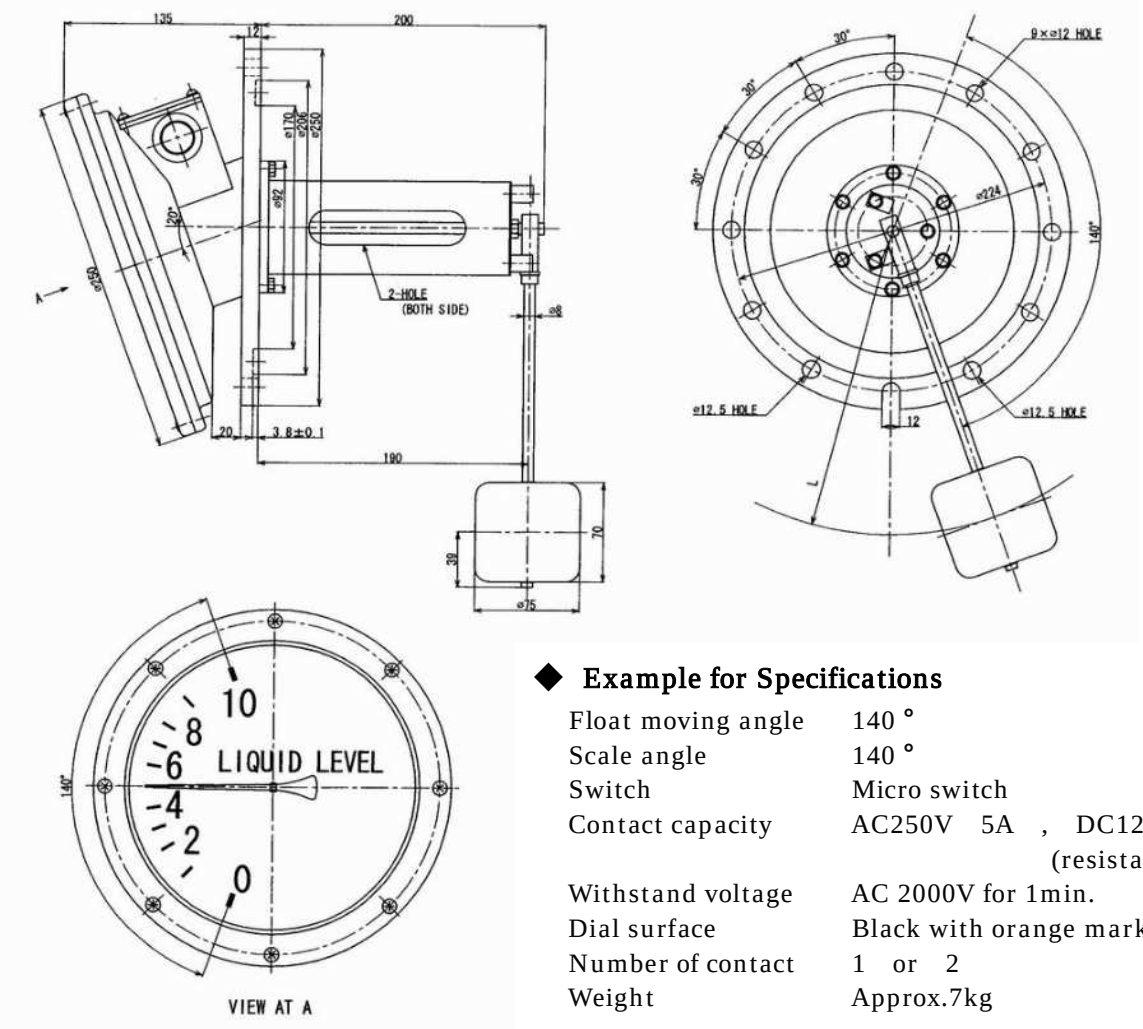

◆ **Example for Specifications**

Float moving angle	140 °
Scale angle	140 °
Switch	Micro switch
Contact capacity	AC250V 5A , DC125V 0.4A (resistance load)
Withstand voltage	AC 2000V for 1min.
Dial surface	Black with orange markings
Number of contact	1 or 2
Weight	Approx.7kg

For further information:
Shinagawa Sokki Mfg. Co., Ltd.
2-16, Omori-minami 1-chome, Ota-ku, Tokyo 143-0013
Phone : +81-3-3745-0011 FAX: +81-3-3745-0015
URL : http://www.shinagawasokki.co.jp

Rev.2010.04